GPON, xGPON, Radio over Fiber

Dr. Erna Sri Sugesti

BACKGROUND

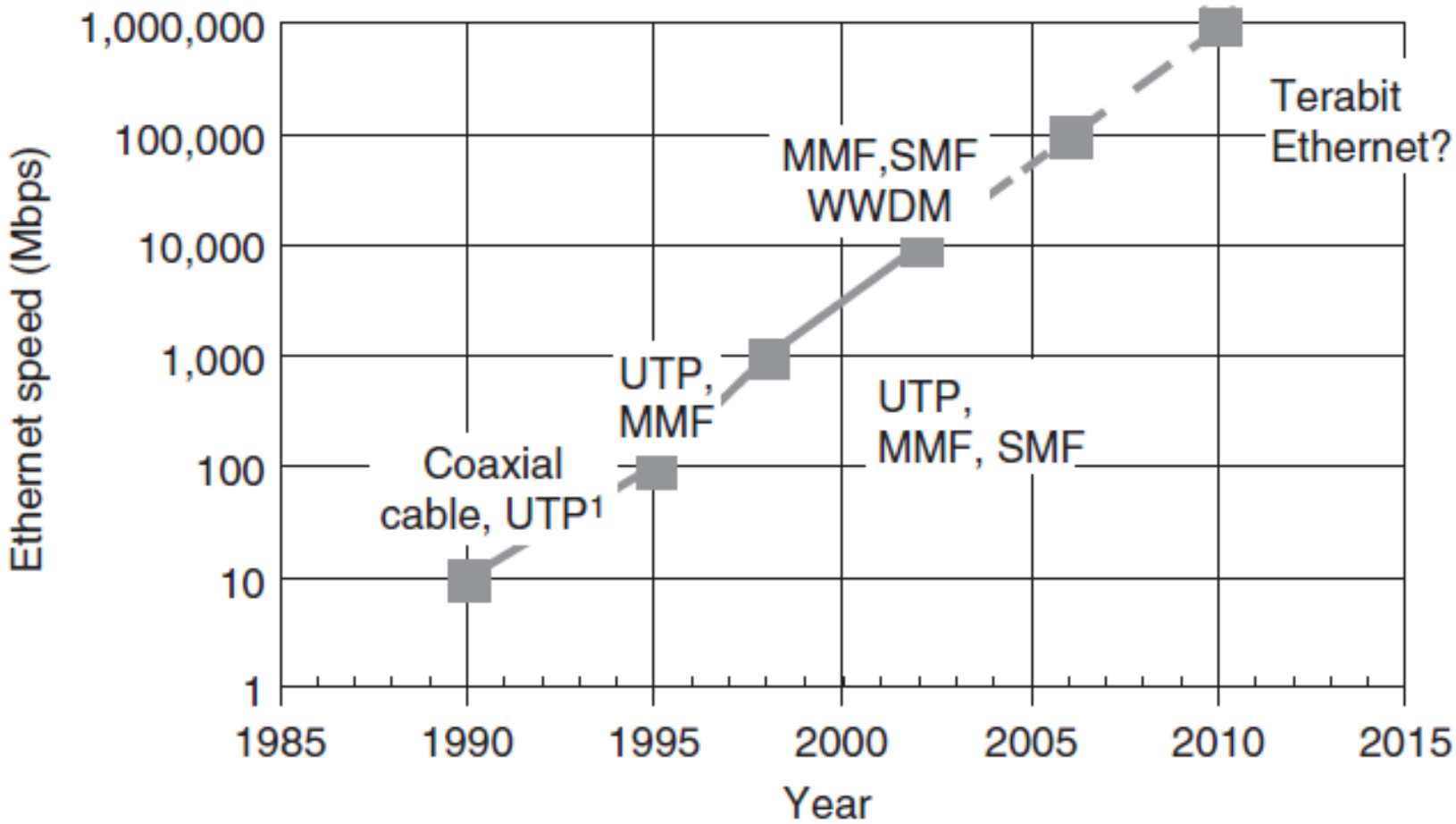

UTP: unshielded twisted pair
SMF: single-mode fiber
MMF: multimode fiber
WWDM: wide wavelength division multiplexing

1. 10-Mb Ethernet using coaxial cables was developed in the 1980s. Ethernet becomes very popular after 10BASE-T was invented in 1990.

Figure 1.1 Development trend of Ethernet technologies.

Table 1.3

Bandwidth requirements for different IP services

Application	Bandwidth	QoS
Video (SDTV)	3.5 Mbps	Low loss, low jitter, constant bit rate
Video (HDTV)	15 Mbps	Same as above
Telecommuting	10 Mbps	Best effort, bursty
Video gaming	10 Mbps	Low loss, low jitter, bursty
Voice	64 kbps	Low loss, low latency, constant bit rate
Peer-to-peer downloading	100 kbps–100 Mbps	Best effort

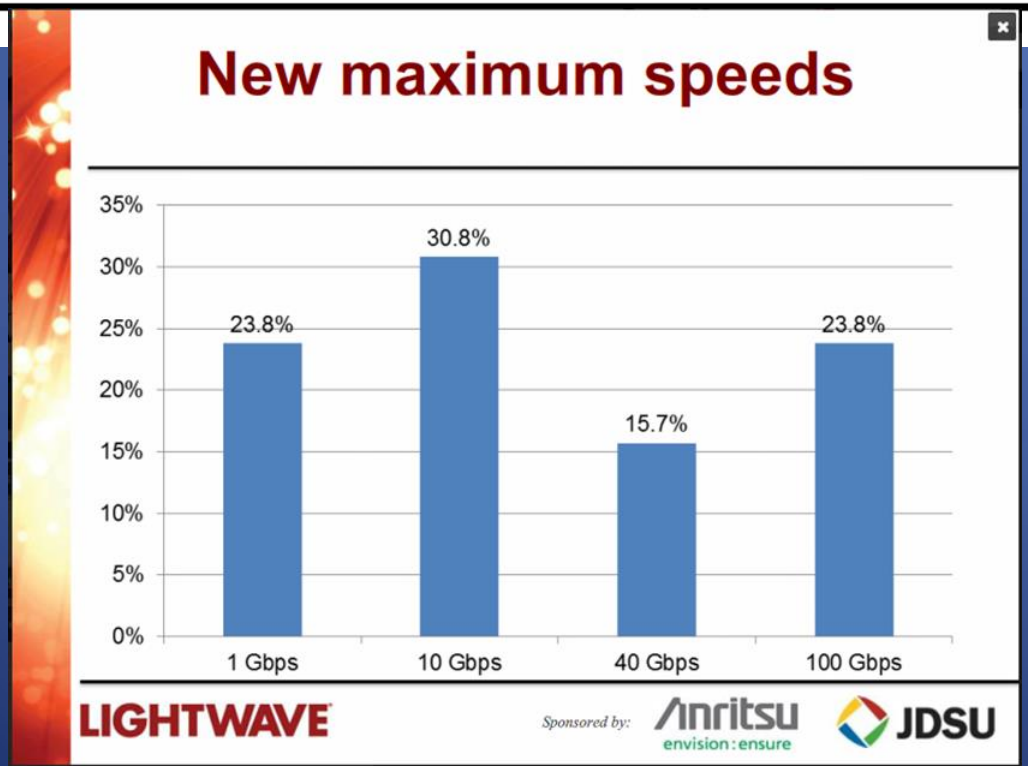

100G as growth driver will continue

- 10G still volume leader, but 100G will continue to be the big story
  - Includes both 100 Gigabit Ethernet and 100G coherent
  - 100G metro won't take off for a while, but will grow
    - Mostly coherent, with new transceivers toward tail end of year
    - Significantly smaller but real market for 100G direct detect

Sponsored by: Anritsu Discover What's Possible® JDSU

100G is a long-term trend

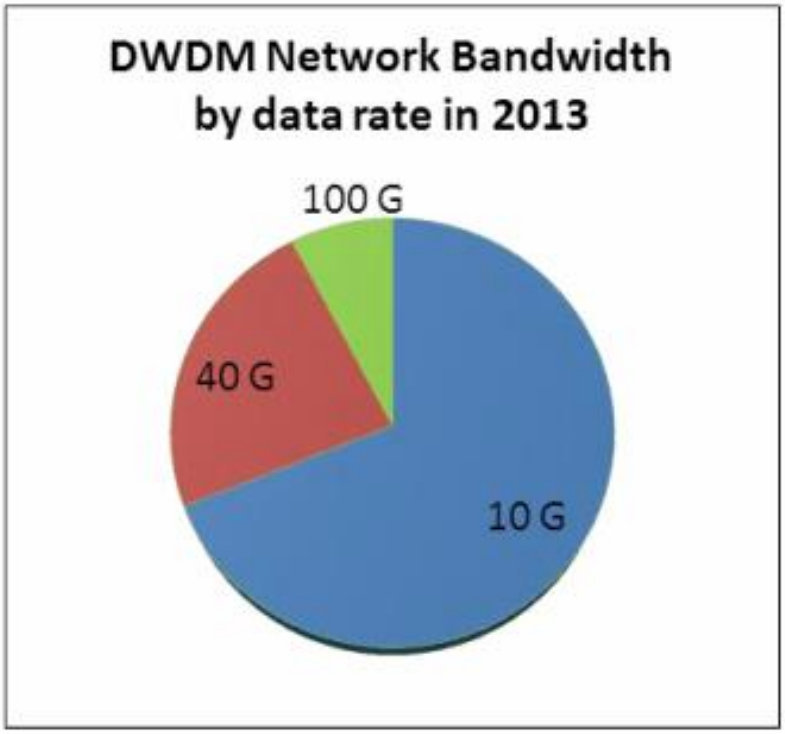

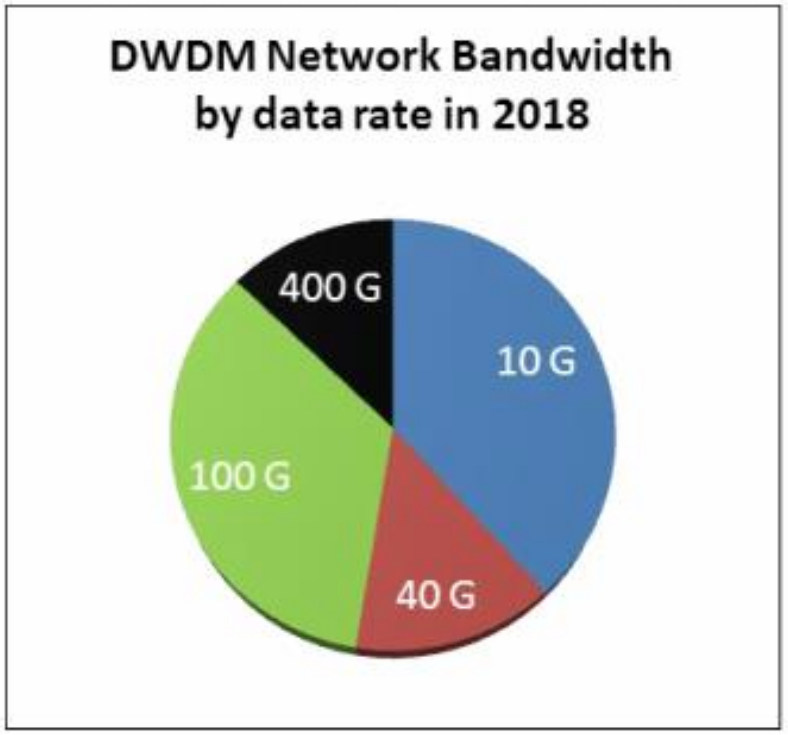

Source: LightCounting Market Research

PON TECHNOLOGY DEVELOPMENT

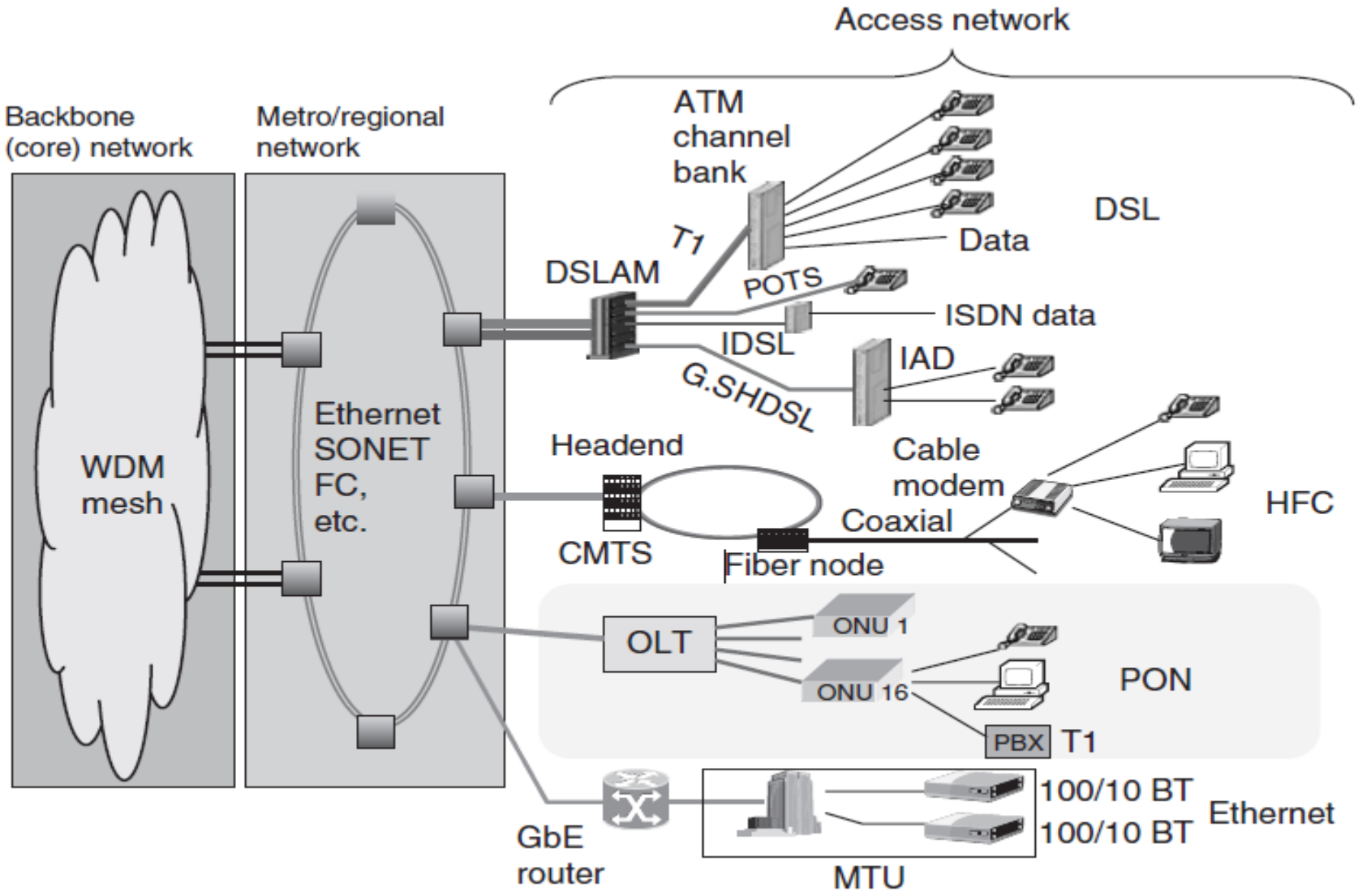

Figure 2.1 Generic structure of a modern telecommunication network.

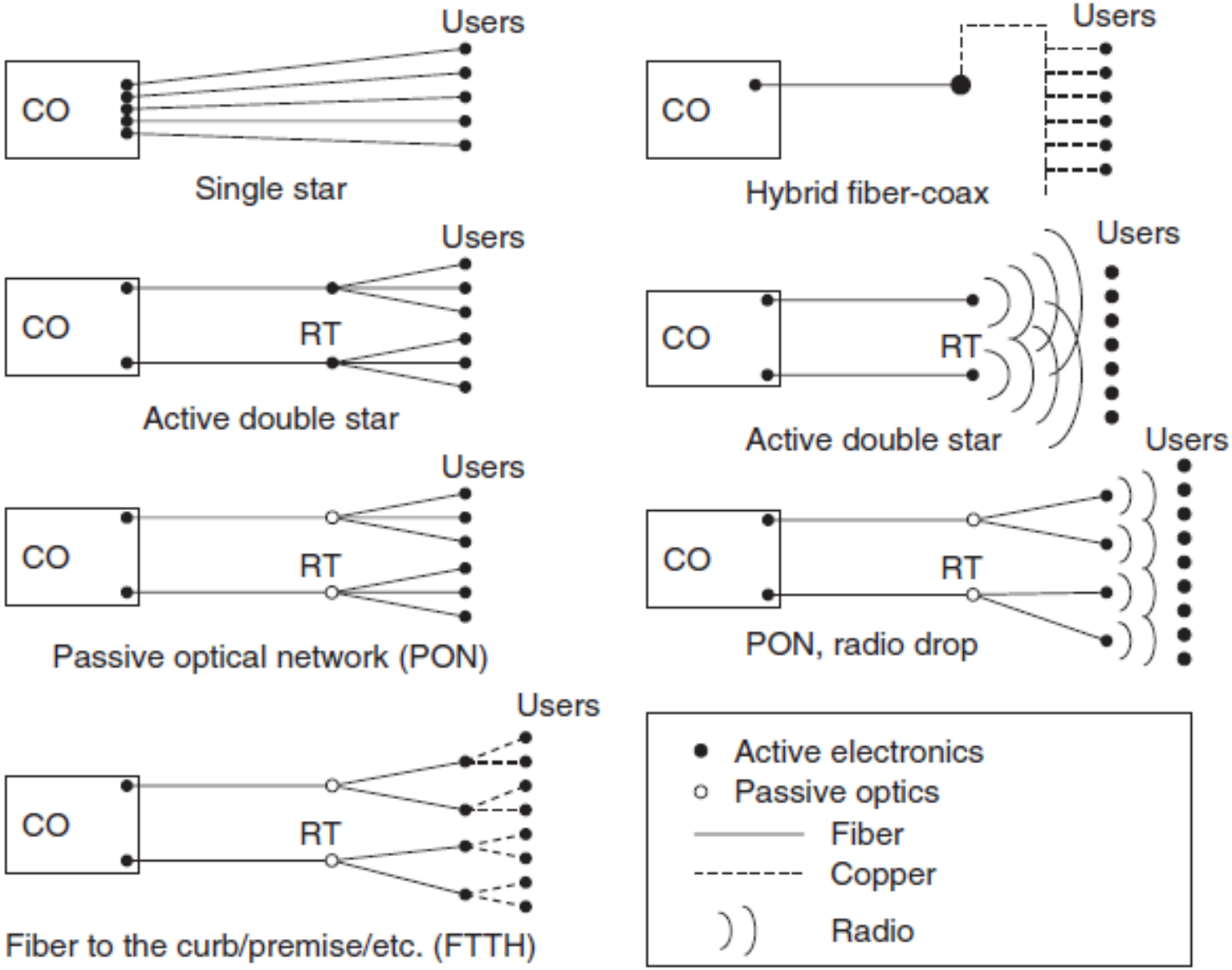

Figure 2.2 FTTx alternatives (from [1] copyright [2004] by IEEE, reprinted with permission).

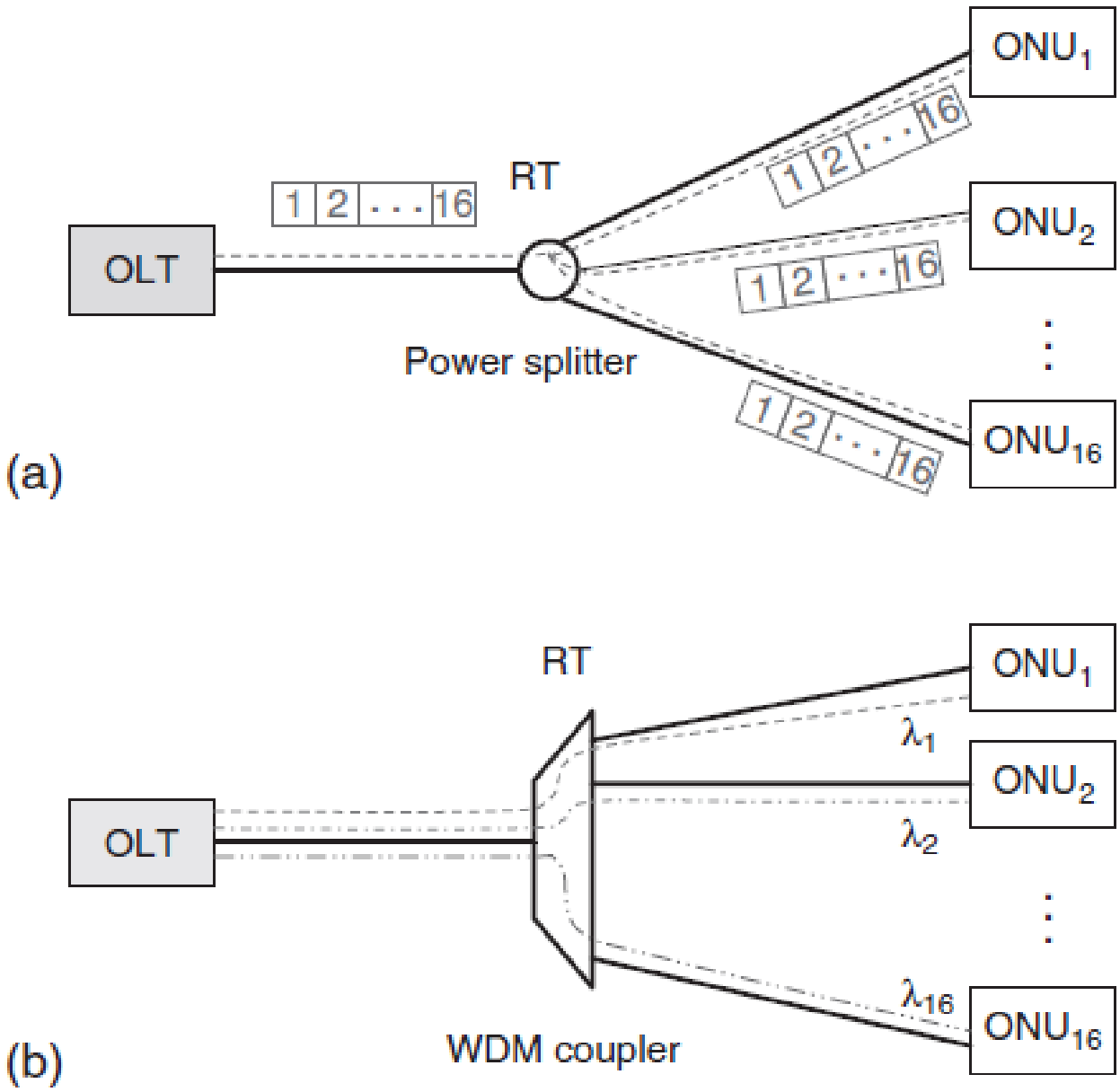

Figure 2.3 Architecture of (a) TDM-PON and (b) WDM-PON.

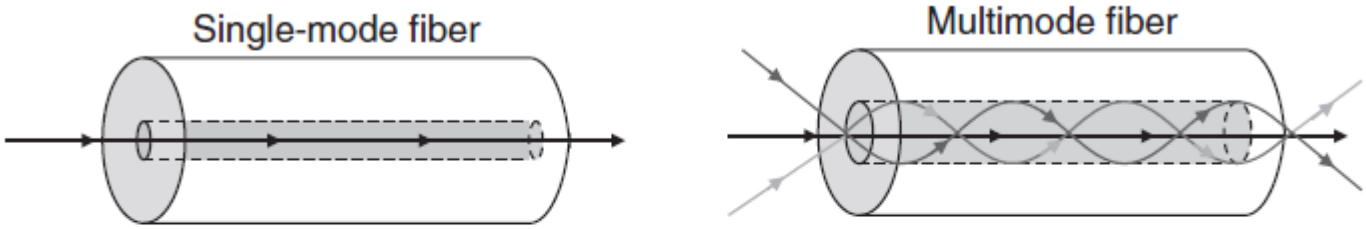

SMF: small core diameter ~10 μm
MMF: common core diameters 50 μm, 62.5 μm

Figure 2.4 Single-mode fiber (SMF) vs multimode fiber (MMF).

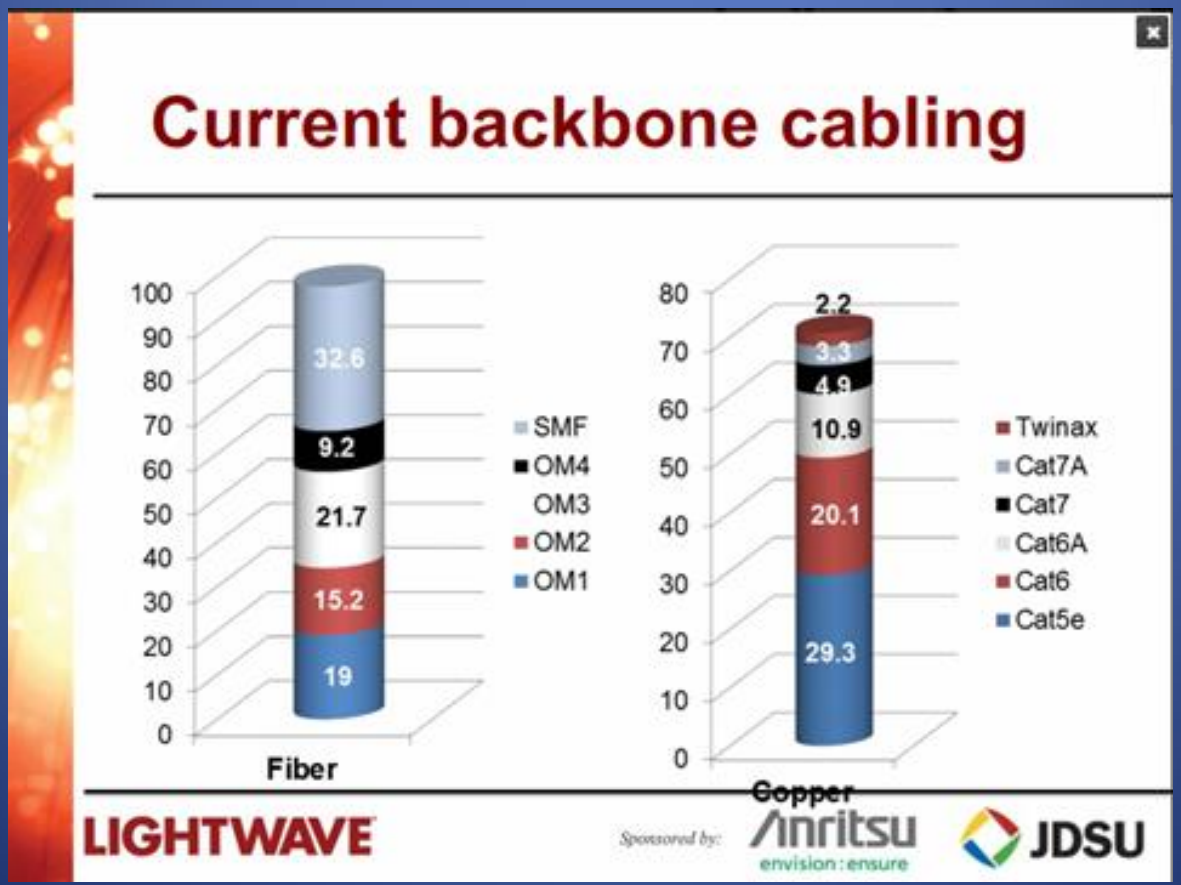

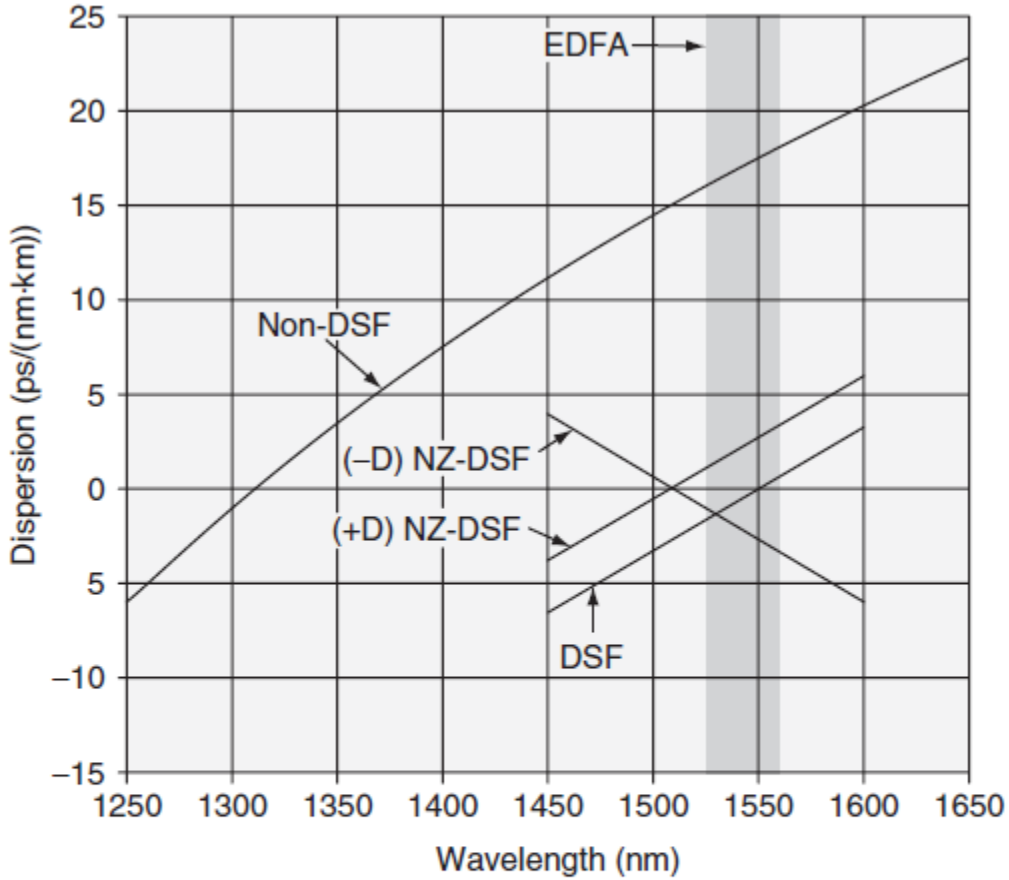

Non-DSF: Nondispersion shifted fiber, which is also called standard single-mode fiber or ITU-T G.652 fiber
(–D) NZ-DSF: negative nonzero dispersion shifted fiber
(+D) NZ-DSF: positive nonzero dispersion shifted fiber
DSF: dispersion shifted fiber with nearly zero dispersion in C-band

Figure 2.5 Dispersion coefficient as a function of wavelengths for various types of optical fibers.

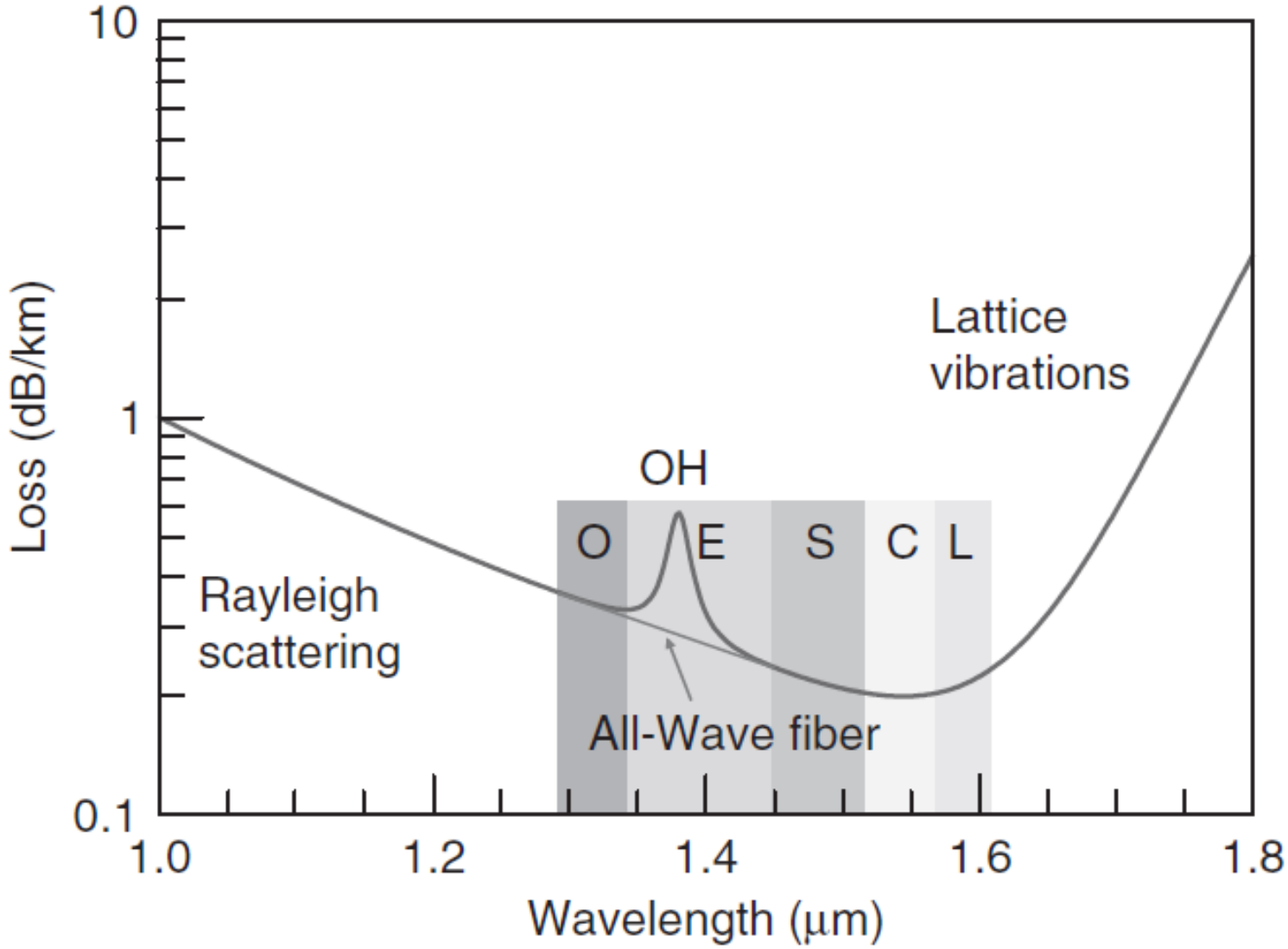

Figure 2.6 Loss in an optical fiber at different wavelengths.

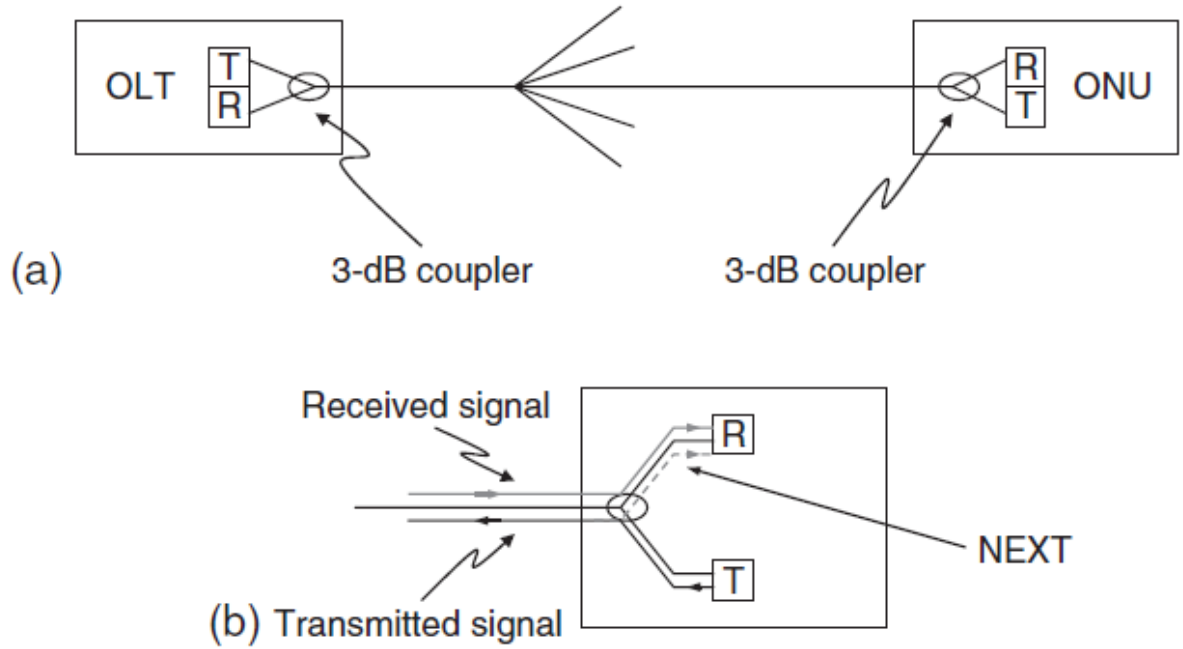

Figure 2.7 (a) One-fiber single-wavelength bidirectional transmission. (b) Near-end cross talk

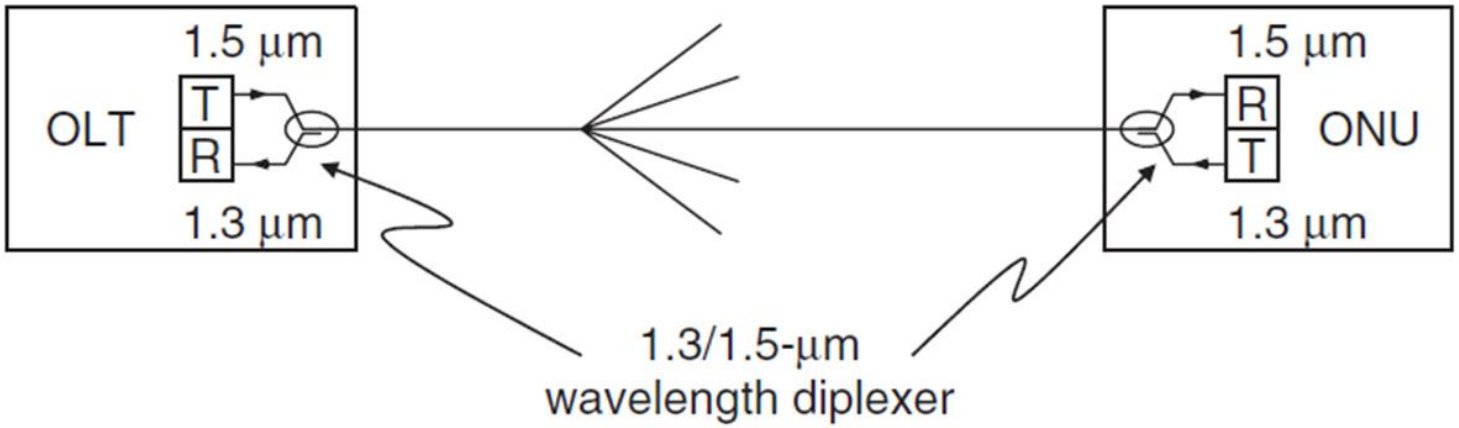

Figure 2.8 Wavelength division duplex uses 1.3/1.5-μm coarse WDM coupler (diplexer) to separate upstream and downstream signals.

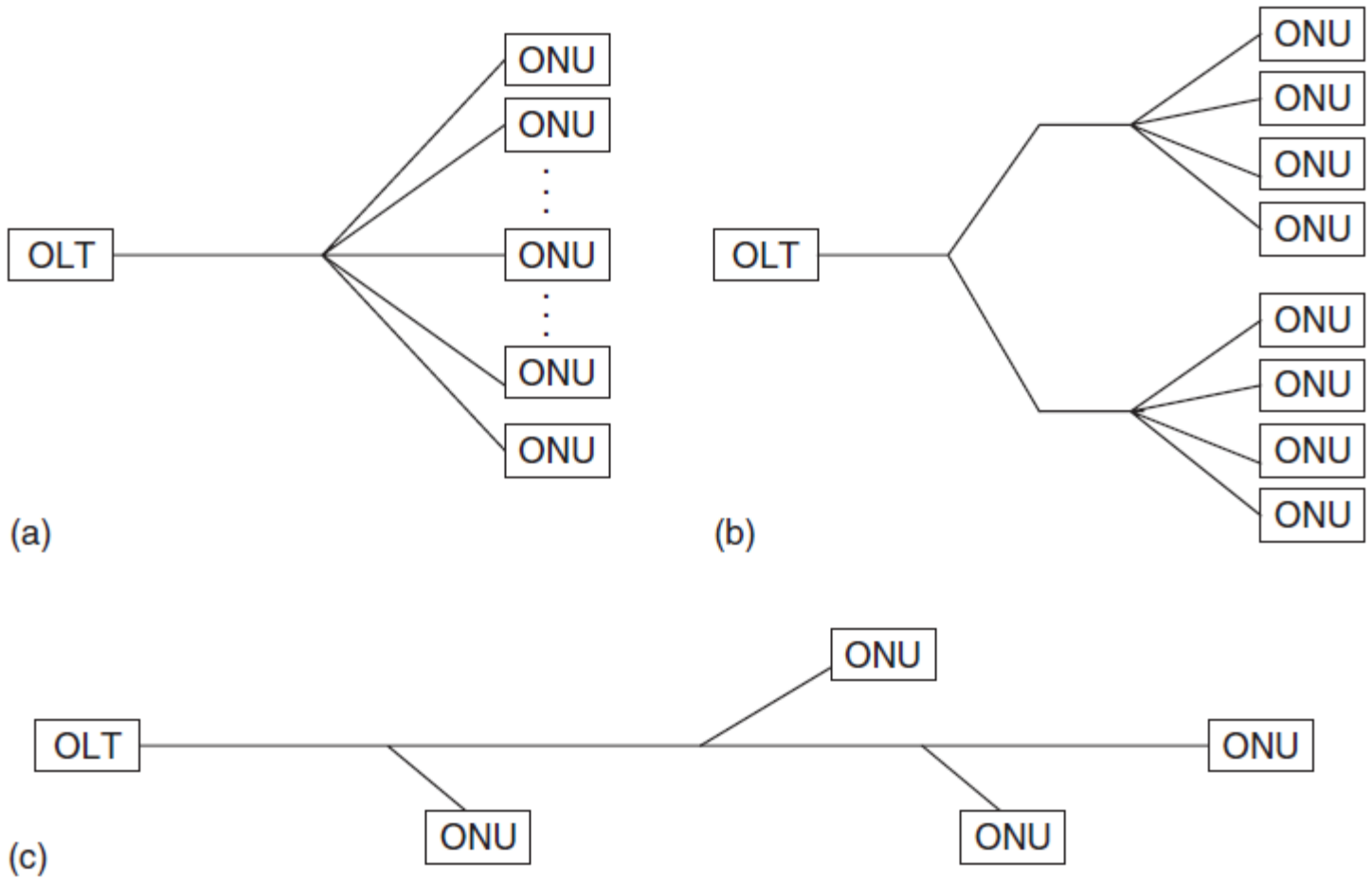

Figure 2.9 Splitting strategies in a TDM-PON: (a) one-stage splitting, (b) multistage splitting, and (c) optical bus.

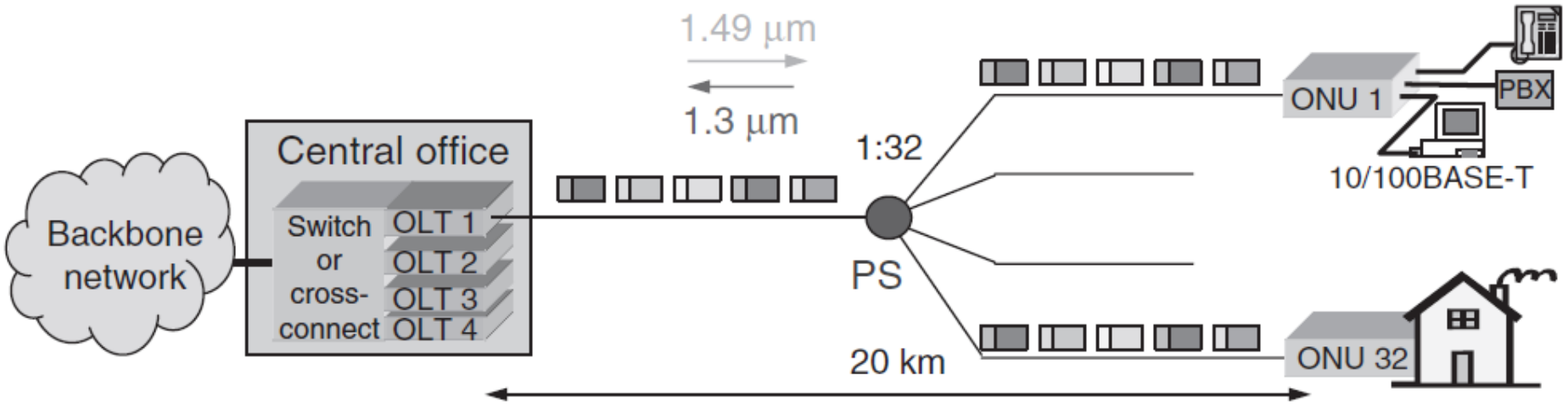

Figure 2.10 Standard commercial TMD-PON architecture.

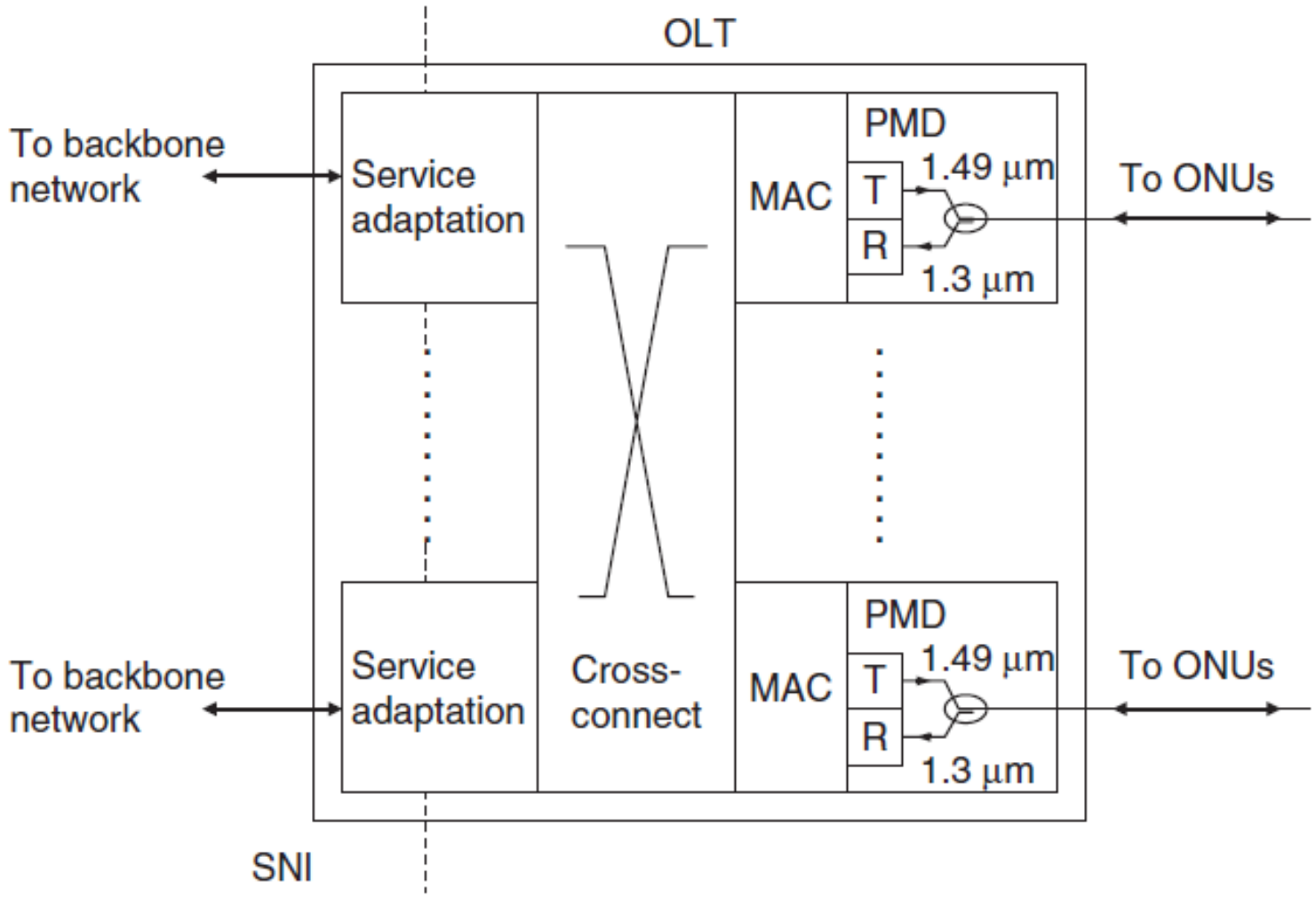

Figure 2.11 Generic structure of a standard TDM-PON OLT. This diagram represents a chassis with multiple OLT cards, which are interconnected through a back plane switch. Each OLT card with its own MAC and PMD layer serves a separate PON.

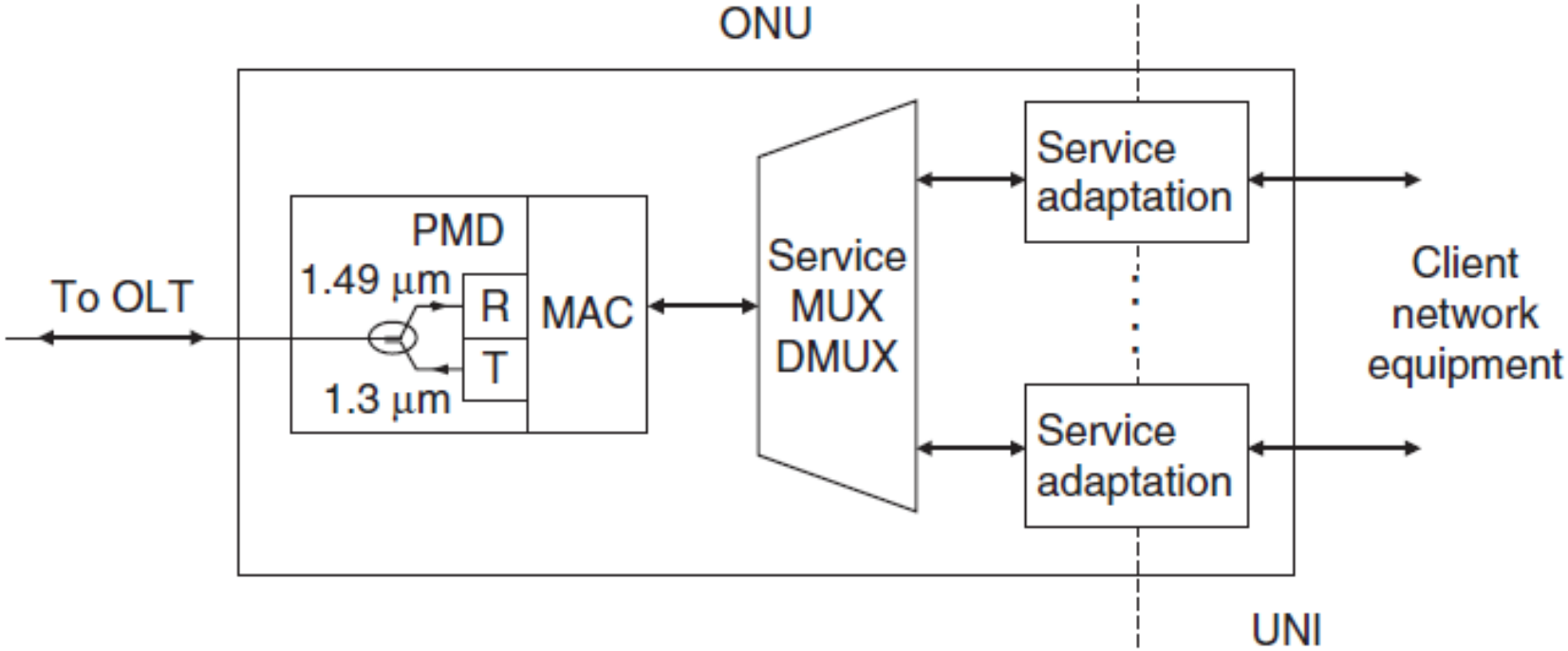

Figure 2.12 Generic structure of a standard TDM-PON ONU.

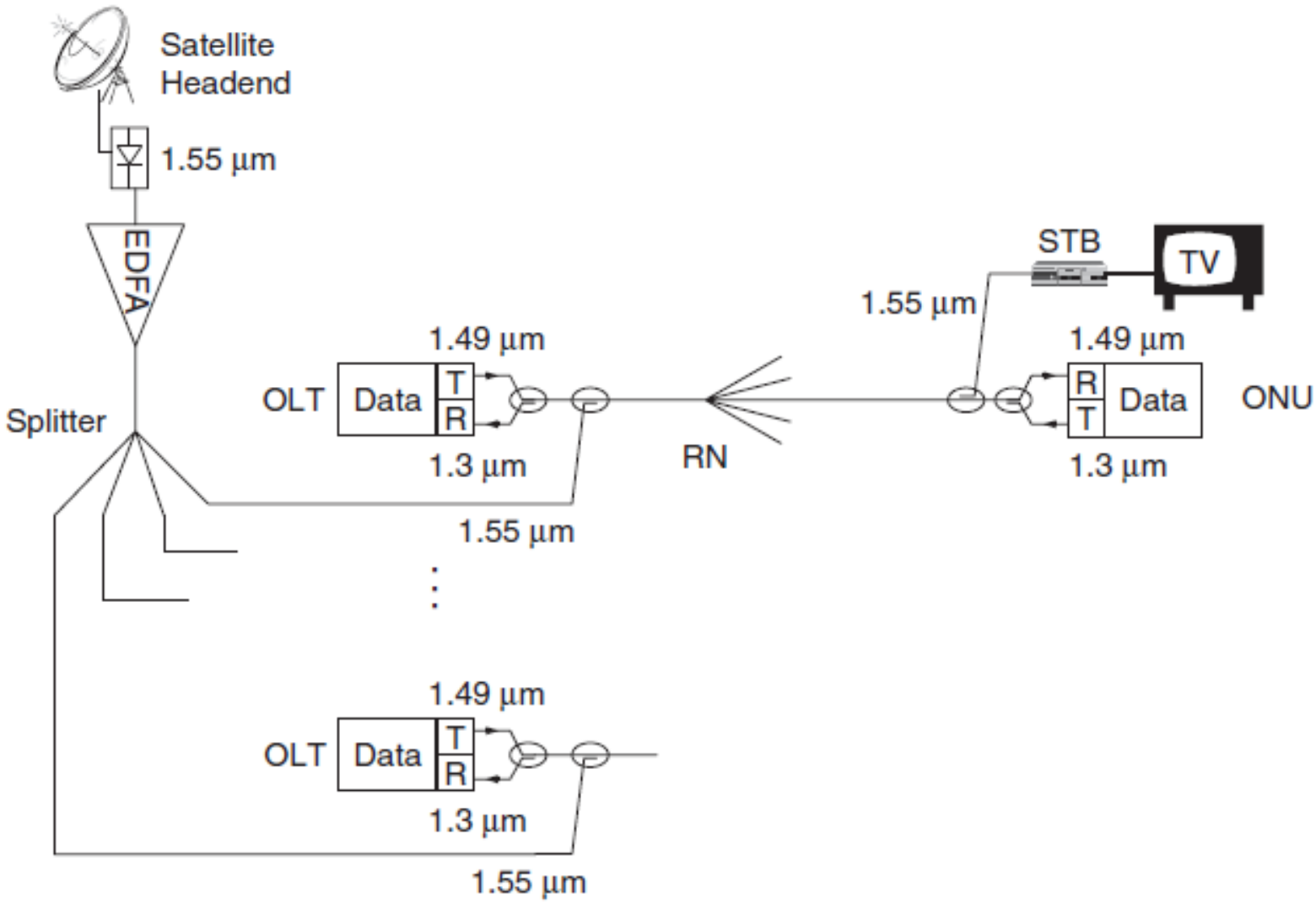

Figure 2.13 Overlaying analog broadcast TV services on a TDM-PON using the 1.55-µm wavelength.

APON/BPON AND G-PON

ATM-PON and ITU-T G.983

All ITU PON standards feature three classes of optical transmission layer designs with different ODN (Optical Distribution Network) attenuations between ONU and OLT. The three classes are specified in ITU-T G.982 as:

- Class A: 5–20 dB
- Class B: 10–25 dB
- Class C: 15–30 dB

Class C design is a very demanding power budget requirement for a passive fiber plant. For practical implementation yield and cost reasons, Class B+ with 28-dB attenuation was later introduced by most PON transceiver vendors

Table 2.1

APON downstream/upstream bit-rate combinations

Downstream	Upstream
1. 155.52 Mbps	155.52 Mbps
2. 622.08 Mbps	155.52 Mbps
3. 622.08 Mbps	622.08 Mbps
4. 1,244.16 Mbps	155.52 Mbps
5. 1,244.16 Mbps	622.08 Mbps

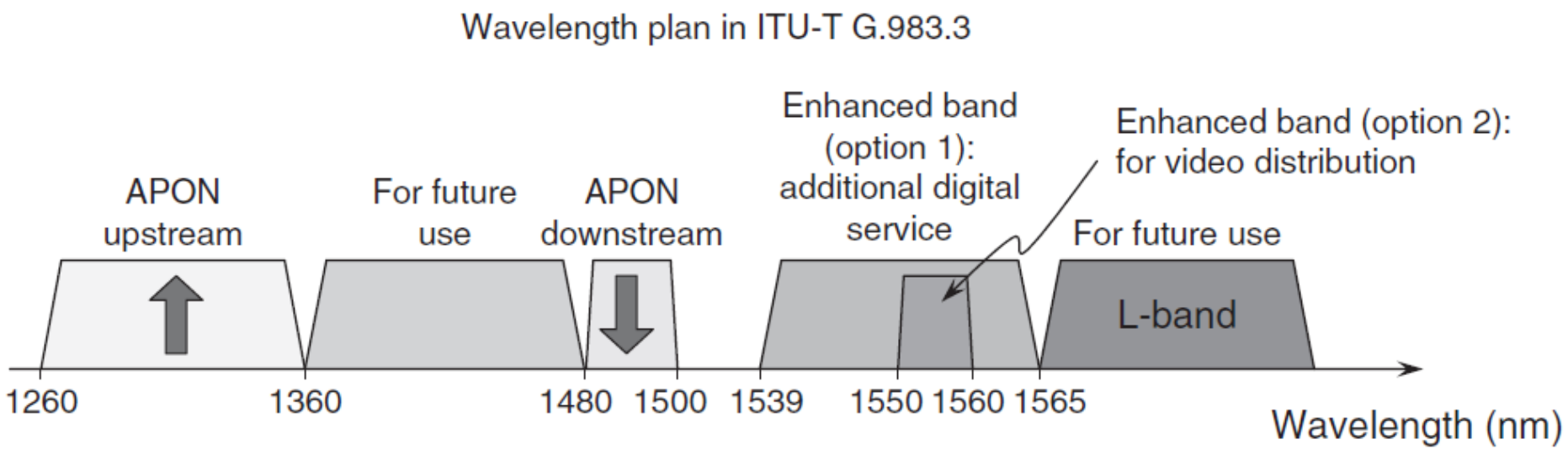

Figure 2.16 Wavelength allocation plan in ITU-T G.983.3.

G-PON and ITU-T G.984

To better cope with the changes in communication technologies and meet fast-growing demand, ITU-T created the G.984 series standards for PONs with Gigabit capabilities, or G-PON

ITU-T G.984.1 gives a high-level overview of G-PON components and reference structure. G-PON PMD layer or transceiver requirements are covered by the ITU-TG.984.2 standard. Similar to APON, G-PON also defined single-fiber and dual-fiber PMDs. The bit rates defined in G.984 are:

- Downstream: 1244.16 Mbps/2488.32 Mbps
- Upstream: 155.52 Mbps/622.08 Mbps/1244.16 Mbps/2488.32 Mbps

As the bit rate advances into the gigabit regime, PON optical layer starts to become challenging.

First, to cover the full 20-km transmission distance, multilongitudinal-mode (MLM) lasers cannot be used at ONU any more in order to avoid excessive dispersion penalty.

Second, to cover the loss budget requirements for Class B (10–25 dB) and Class C (15–30 dB) fiber plants, more sensitive avalanche photo-diodes (APDs) are required instead of the lower cost PIN receivers. Without proper protection circuits, APDs are susceptible to damages due to avalanche breakdown if the inputs optical power becomes too high.

XGPON

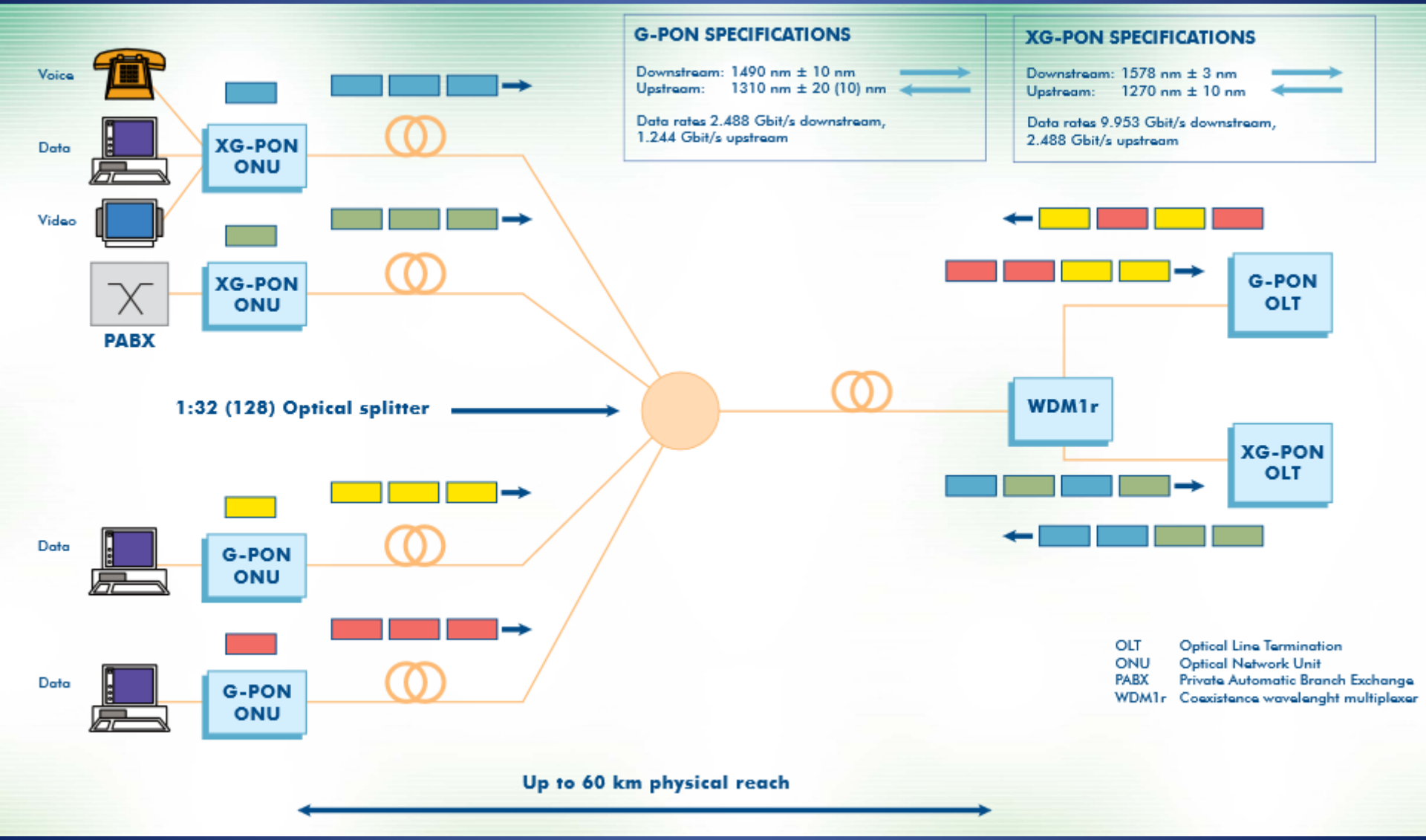
G-PON SPECIFICATIONS
Downstream: 1490 nm ± 10 nm
Upstream: 1310 nm ± 20 (10) nm
Data rates 2.488 Gbit/s downstream, 1.244 Gbit/s upstream
XG-PON SPECIFICATIONS
Downstream: 1578 nm ± 3 nm
Upstream: 1270 nm ± 10 nm
Data rates 9.953 Gbit/s downstream, 2.488 Gbit/s upstream
Voice
Data
Video
XG-PON ONU
XG-PON ONU
PABX
1:32 (128) Optical splitter
G-PON OLT
WDM1r
XG-PON OLT
Data
G-PON ONU
Data
G-PON ONU
OLT Optical Line Termination
ONU Optical Network Unit
PABX Private Automatic Branch Exchange
WDM1r Coexistence wavelenght multiplexer
Up to 60 km physical reach

XG-PON means

- Full compatibility with G-PON — by virtue of a wavelength plan, blocking filters and loss budget that allow coexistence on a common PON infrastructure
- Support for single-sided and mid-span reach extension, with reach of up to 60 km
- Full service support — including voice, TDM, Ethernet (up to Gigabit rates), xDSL, wireless backhaul
- Powerful Operation Administration Maintenance and Provisioning (OAM&P) capabilities providing a feature-rich service management system
- Advanced security features including authentication, rogue detection and information privacy
- Power-saving features on top of the already considerable power-efficient nature of fibre access

G.987 — 10-Gigabit-capable passive optical network (XG-PON) systems: Definitions, abbreviations and acronyms

Establishes common terms and acronyms used in the G.987 series, as well as delineates various optical access topologies.

G.987.1 — 10-Gigabit-capable passive optical network (XG-PON) systems: General requirements Lists system-level requirements for XG-PON systems. Most significantly, the XG-PON system can coexist with a G-PON system on the same ODN. Provides examples of the wide variety of SNIs, UNIs and system configurations possible.

G.987.2 — 10-Gigabit-capable passive optical network (XG-PON) systems: Physical media dependent (PMD) layer specification

Defines the physical layer interface specifications for the system operating at the nominal data rates of 10 Gbit/s downstream, 2.5 Gbit/s upstream.

RADIO OVER FIBER

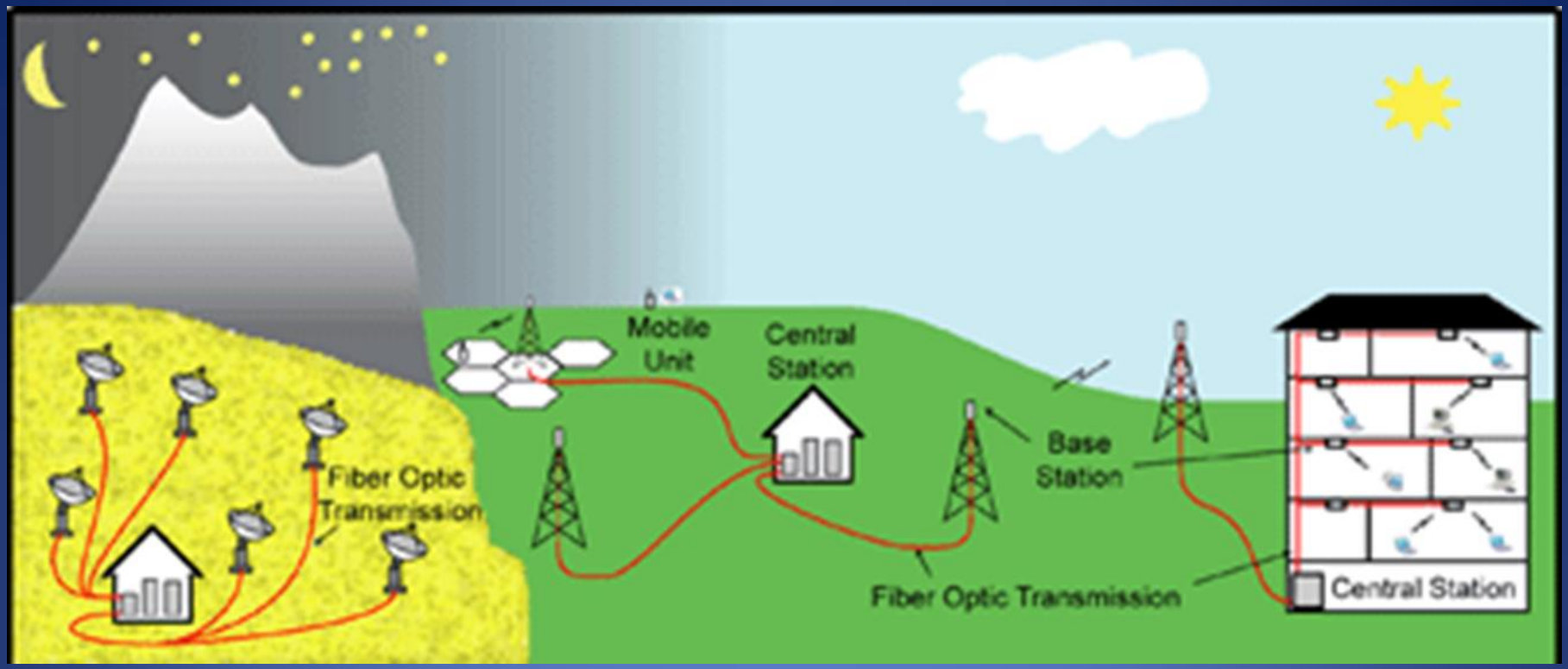
Mobile Unit
Central Station
Base Station
Fiber Optic Transmission
Fiber Optic Transmission
Central Station

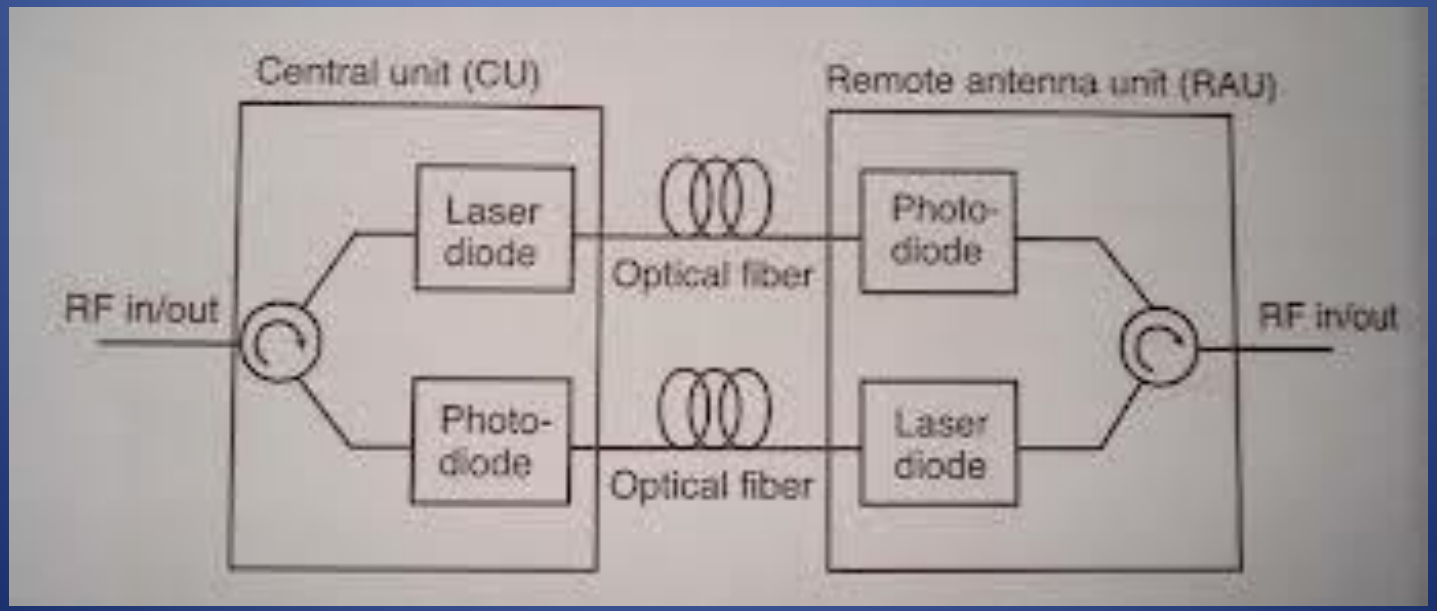
Central unit (CU)
Remote antenna unit (RAU)
Laser diode
Photo-diode
Optical fiber
Photo-diode
Laser diode
Optical fiber
RF in/out
RF in/out

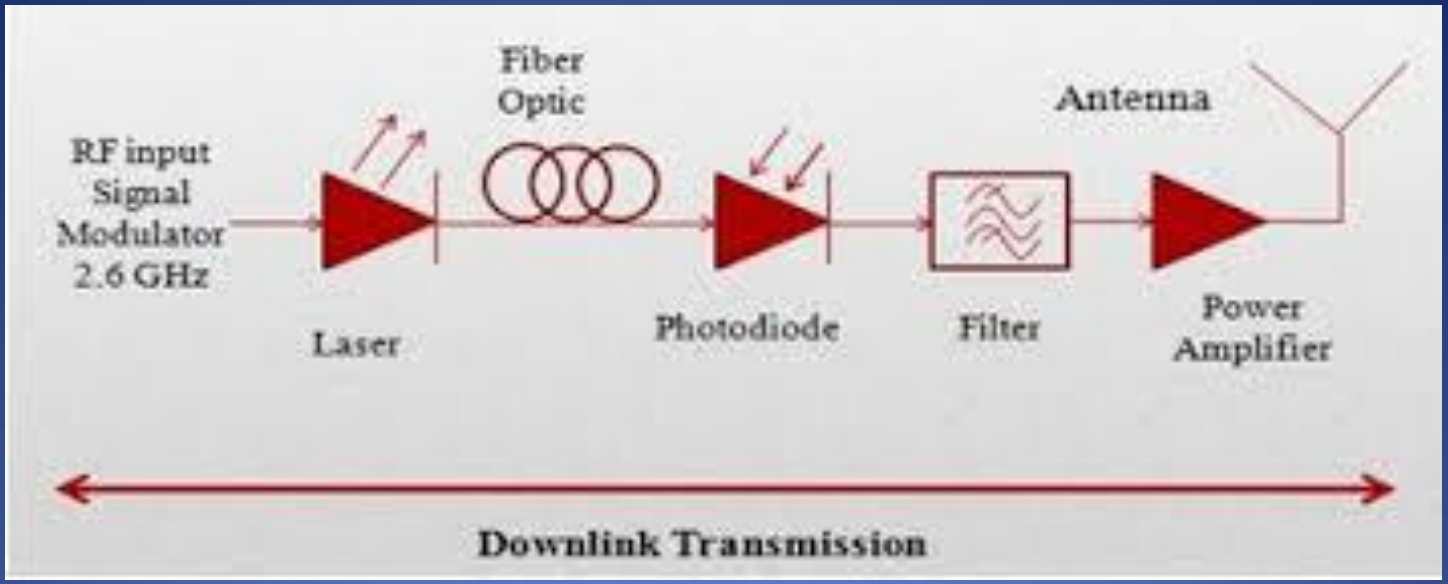
Fiber
Optic
Antenna
RF input
Signal
Modulator
2.6 GHz
Laser
Photodiode
Filter
Power
Amplifier
Downlink Transmission

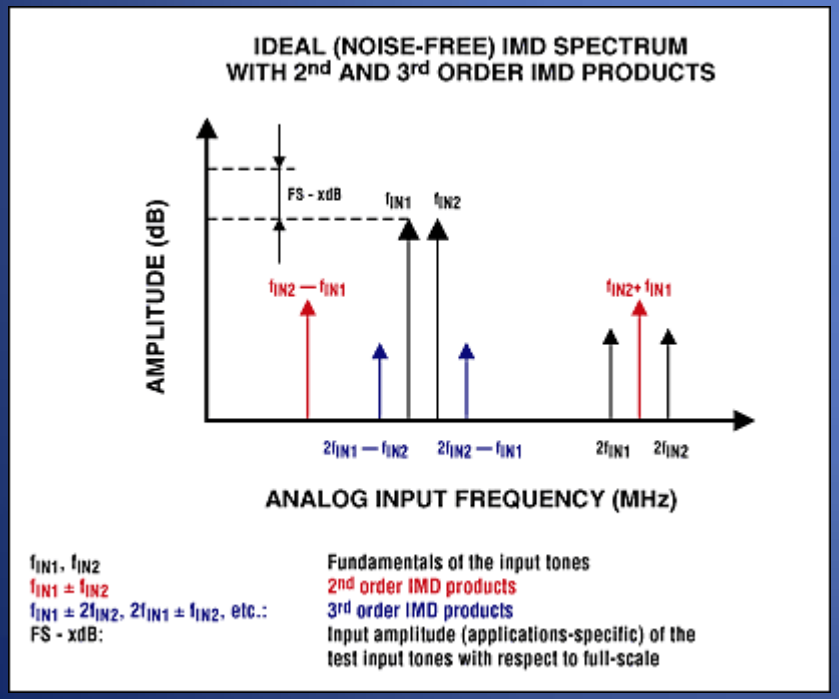
IDEAL (NOISE-FREE) IMD SPECTRUM
WITH 2nd AND 3rd ORDER IMD PRODUCTS
AMPLITUDE (dB)
FS - xdB
fIN1
fIN2
fIN2 — fIN1
fIN2+ fIN1
2fIN1 — fIN2
2fIN2 — fIN1
2fIN1
2fIN2
ANALOG INPUT FREQUENCY (MHz)
fIN1, fIN2
fIN1 ± fIN2
fIN1 ± 2fIN2, 2fIN1 ± fIN2, etc.:
FS - xdB:
Fundamentals of the input tones
2nd order IMD products
3rd order IMD products
Input amplitude (applications-specific) of the test input tones with respect to full-scale

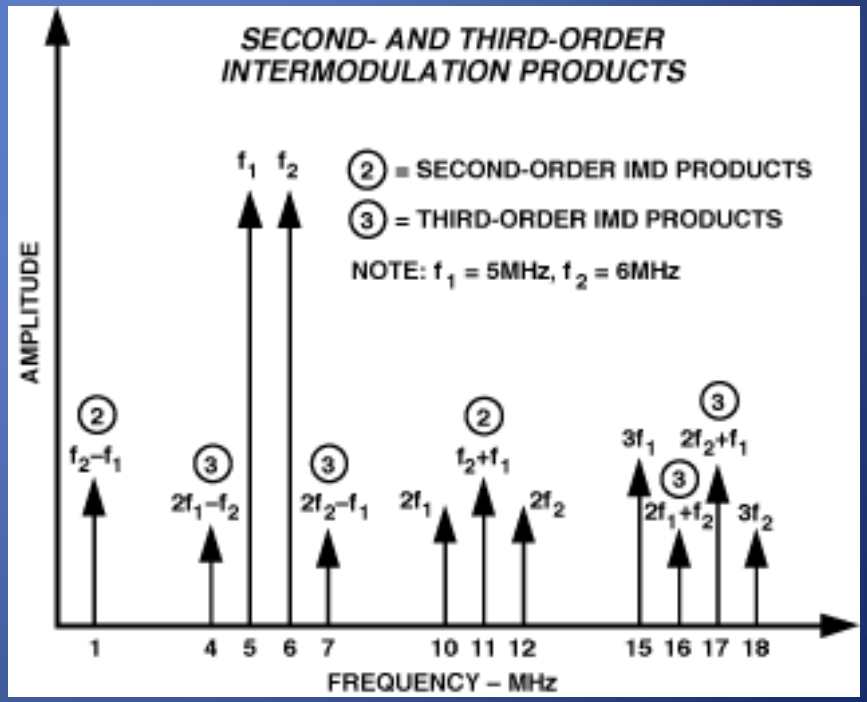
SECOND- AND THIRD-ORDER
INTERMODULATION PRODUCTS
2 = SECOND-ORDER IMD PRODUCTS
3 = THIRD-ORDER IMD PRODUCTS
NOTE: f1 = 5MHz, f2 = 6MHz
AMPLITUDE
f1 f2
f2−f1
2f1−f2
2f2−f1
2f1
f2+f1
2f2
3f1
2f1+f2
2f2+f1
3f2
1 4 5 6 7 10 11 12 15 16 17 18
FREQUENCY – MHz

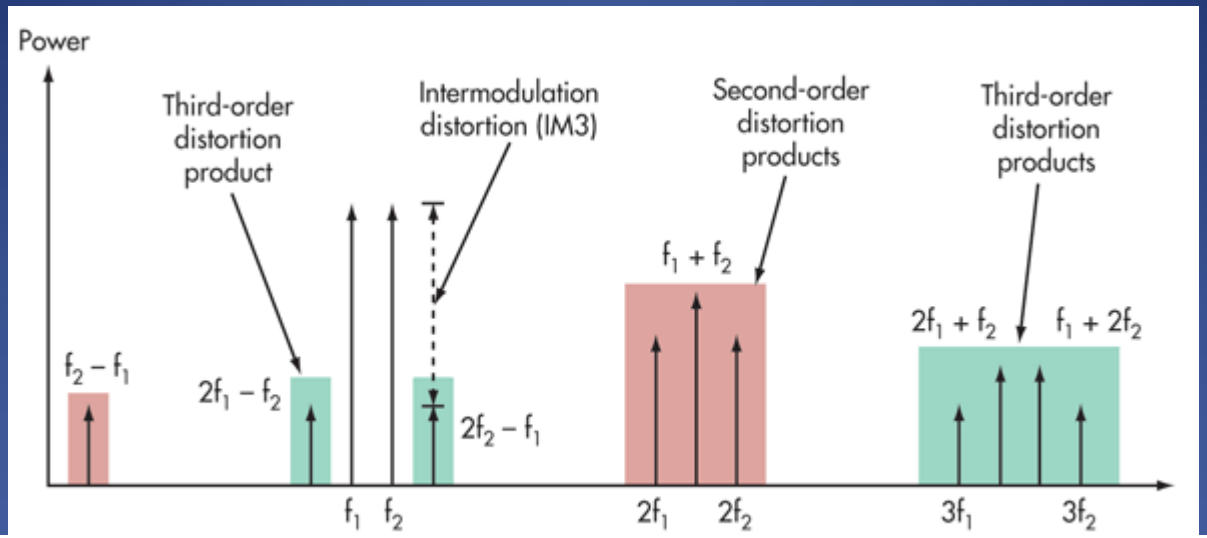

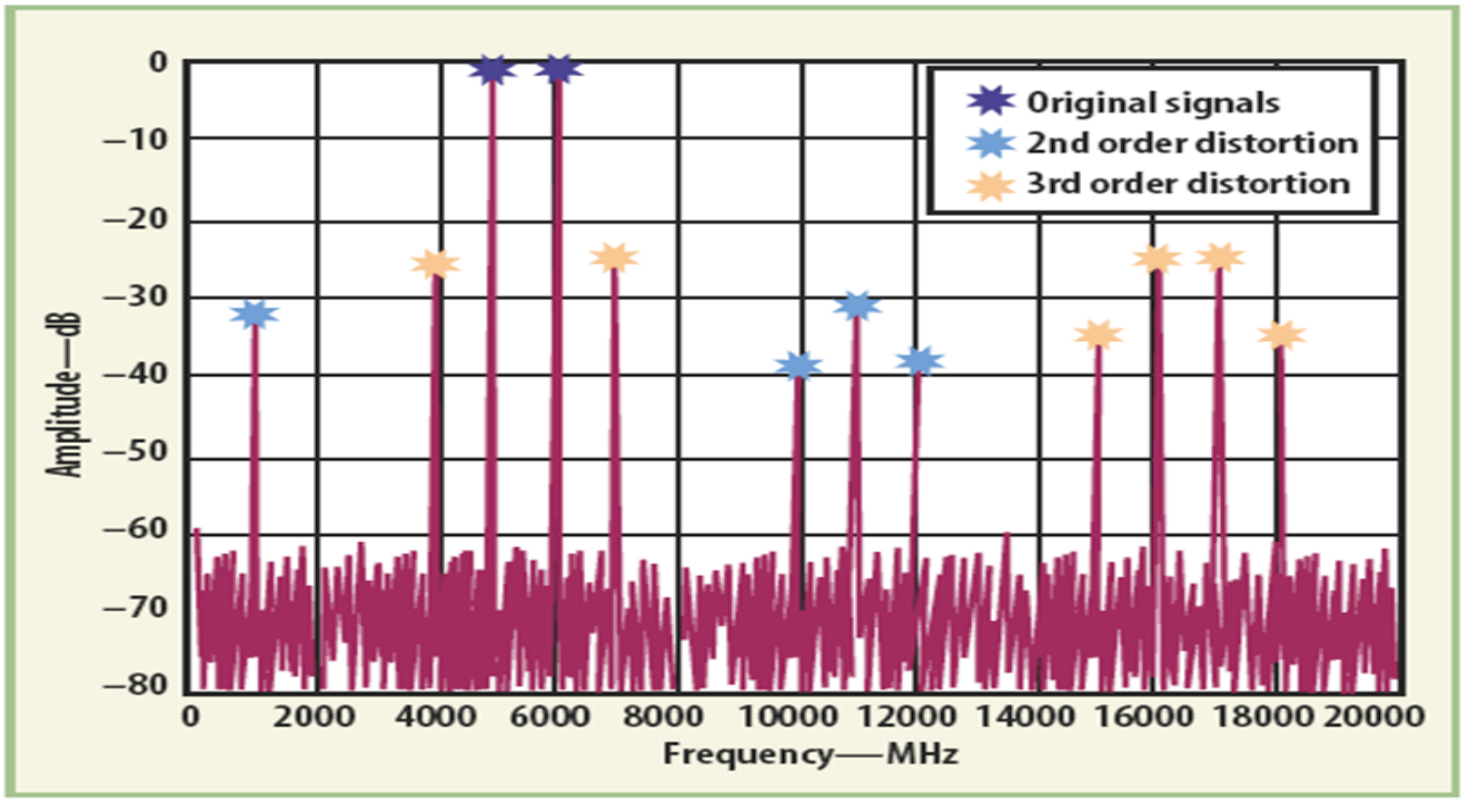

2. This plot shows the output spectrum of a nonlinear two-port network.

References:

- C. F. Lam, Passive optical networks : principles and practice, Elsevier, 2007.
- Fiber in The Data Center II: Another Lightwave Study, Webinar, May 7, 2014
- Some figures are downloaded from several sources in the internet